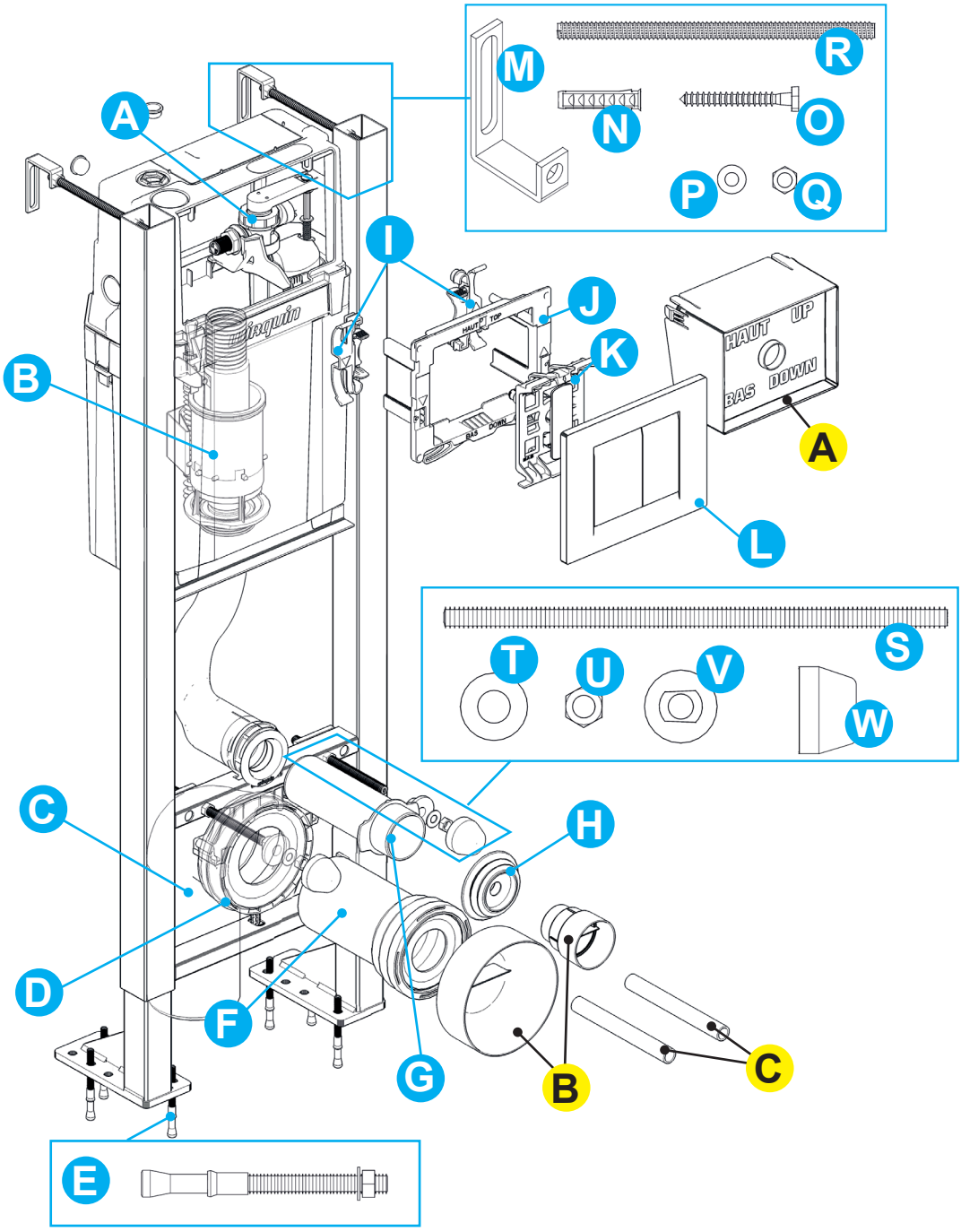
M
R
N
O
P
Q
A
I
J
K
B
HAUT
UP
BAS
DOWN
A
L
S
T
U
V
W
C
H
D
F
G
B
C
E